Electrolux PROFESSIONAL

Modular Cooking Range Line 700XP Electric Hob Cooking Top 800 mm

ITEM #

MODEL #

NAME #

SIS #

AIA #



371028 (E7HOEH4000) Full module electric hob cooking top

Short Form Specification

Item No.

High efficiency 10.6 kW infrared heating elements. Large flat cooking surface in mild steel allows for the use of a number of various sized pots and pans, all easily moved across the surface without lifting. Exterior panels in stainless steel with Scotch Brite finish. One piece pressed work top in 1.5 mm thick stainless steel. Right-angled side edges to allow flush-fitting junction between units.

APPROVAL:

Main Features

- 10.6 kW infrered heating elements can reach a maximum temperature of 400°C.
- Durable mild steel cooking plate, easy to clean.
- Various sizes of pans can be used at the same time due to large surface area with no intermediate sectors.
- Pans can easily be moved from one area to another without lifting.
- All major compartments located in front of unit for ease of maintenance.
- Top configuration allows installation on ambient base only (not possible to install on refrigerated nor freezer base).
- Suitable for countertop installation.

Construction

- All exterior panels in Stainless Steel with Scotch Brite finishing.
- One piece pressed 1.5 mm work top in Stainless steel.
- Model has right-angled side edges to allow flush fitting joints between units, eliminating gaps and possible dirt traps.
- IPx4 water protection.

Optional Accessories

• Junction sealing kit	PNC 206086 ❑
• Draught diverter, 150 mm diameter	PNC 206132 ❑
• Matching ring for flue condenser, 150 mm diameter	PNC 206133 ❑
• Support for bridge type installation, 800mm	PNC 206137 ❑
• Support for bridge type installation, 1000mm	PNC 206138 ❑
• Support for bridge type installation, 1200mm	PNC 206139 ❑
• Support for bridge type installation, 1600mm	PNC 206141 ❑
• Water column with swivel arm (water column extension not included)	PNC 206289 ❑
• Water column extension for 700 line	PNC 206291 ❑
• Right and left side handrails	PNC 206307 ❑
• 2 single portion baskets for automatic programmable pasta cooker	PNC 206312 ❑
• Chimney grid net, 400mm (700XP/900)	PNC 206400 ❑
• Frontal handrail, 800mm	PNC 216047 ❑
• Frontal handrail, 1200mm	PNC 216049 ❑
• Frontal handrail, 1600mm	PNC 216050 ❑
• Large handrail - portioning shelf, 800mm	PNC 216186 ❑

• 2 side covering panels for top appliances	PNC 216277	❑

The company reserves the right to make modifications to the products without prior notice. All information correct at time of printing.

Modular Cooking Range Line 700XP Electric Hob Cooking Top 800 mm

Front

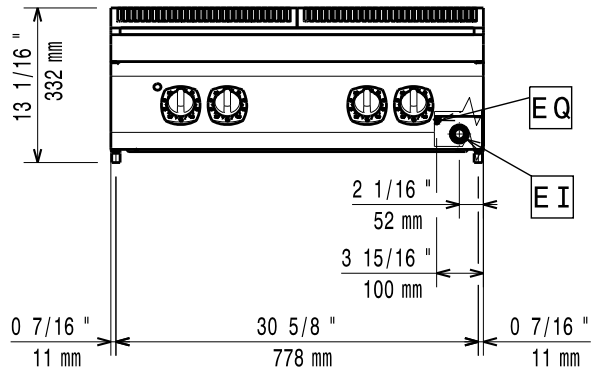

Side

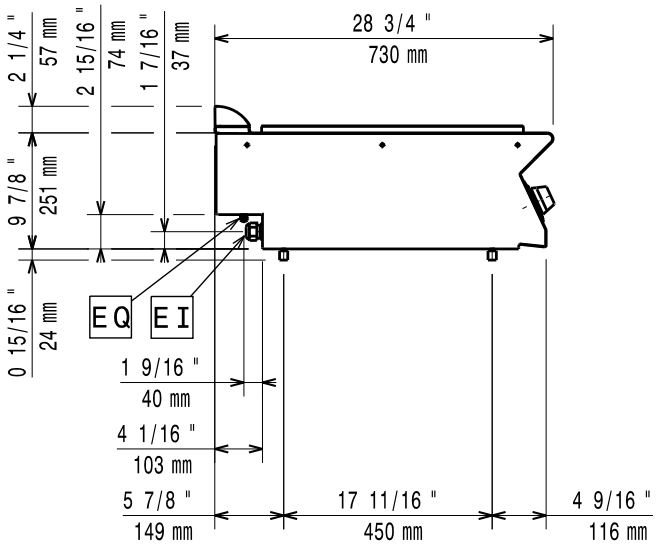

EI = Electrical inlet (power)
EQ = Equipotential screw

Top

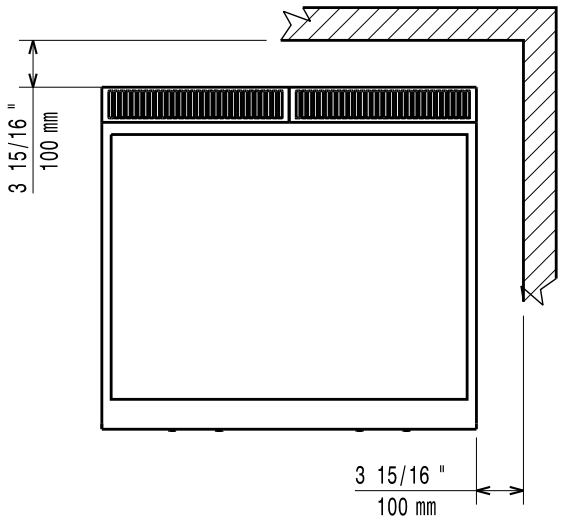

Electric

Supply voltage:	380-400 V/3N ph/50/60 Hz
Rated amps:	0 A
Total Watts:	10 kW

Key Information:

If appliance is set up or next to or against temperature sensitive furniture or similar, a safety gap of approximately 150 mm should be maintained or some form of heat insulation fitted.

External dimensions, Width:	800 mm
External dimensions, Depth:	730 mm
External dimensions, Height:	250 mm
Net weight:	71.5 kg
Shipping weight:	80 kg
Shipping height:	530 mm
Shipping width:	820 mm
Shipping depth:	860 mm
Shipping volume:	0.37 m³
[NOT TRANSLATED]	N7ETE
Solid top usable surface (width):	760 mm
Solid top usable surface (depth):	565 mm

The company reserves the right to make modifications to the products without prior notice. All information correct at time of printing.

2026.11.20